Technical data

Input nominal ranges with switches to choose for every 4 channels	± 500 mV
	± 1V
	± 5 V
	± 10V
	0 – 10V (without any overrange)
	± 20 mA
	4 to 20 mA for 4 wire measuring transductor
Number of inputs	16 voltage/current inputs to ground
Measured-value representation	13 bit (two's complement) or 12 bit + sign;
	± 2048 units in the nominal range;
	512 to 2560 units on 4 to 20 mA
Measurement procedure	Instantaneous-value encoder
Conversion principle	Successive approximation
Electrical isolation	yes
Power supply of the system bus	5V ± 5 %; typ. 500 mA; 2,5 W
Reversible integration time:	
- for quick measured-value acquisition	400 µs per channel
- for optimal interference suppression	20 ms with 50 Hz; 16 ms with 60 Hz
Ready delay time	typ. 10 µs
Input resistance for input range	all voltage ranges 20 kΩ
	all current ranges 125 Ω
Error message	
- overflow	yes
- wire breakage	no
Max. allowable input voltage without destruction	± 15 V referring to the analogue reference
Max. allowable input current without destruction	± 50 mA referring to the analogue reference
Interference suppression for f = n x (50/60 Hz ± 1 %)	
- common mode interferences	≥ 70 dB, however max. ± 1 V
- series mode interferences	≥ 40 dB, amplitude of interference voltage, however max. 100 % of the measuring range referring to the peak value
Error referring to the nominal value at 20 °C environmental temperature	
- linearity	± 1 unit
- limit	± 2 units
- error of polarity reversal	± 2 units

VIPA®

Technical Description

Analogue Input System 465-4EC00

Best.-Nr.: VIPA 465-HB41E
Rev. 00/12

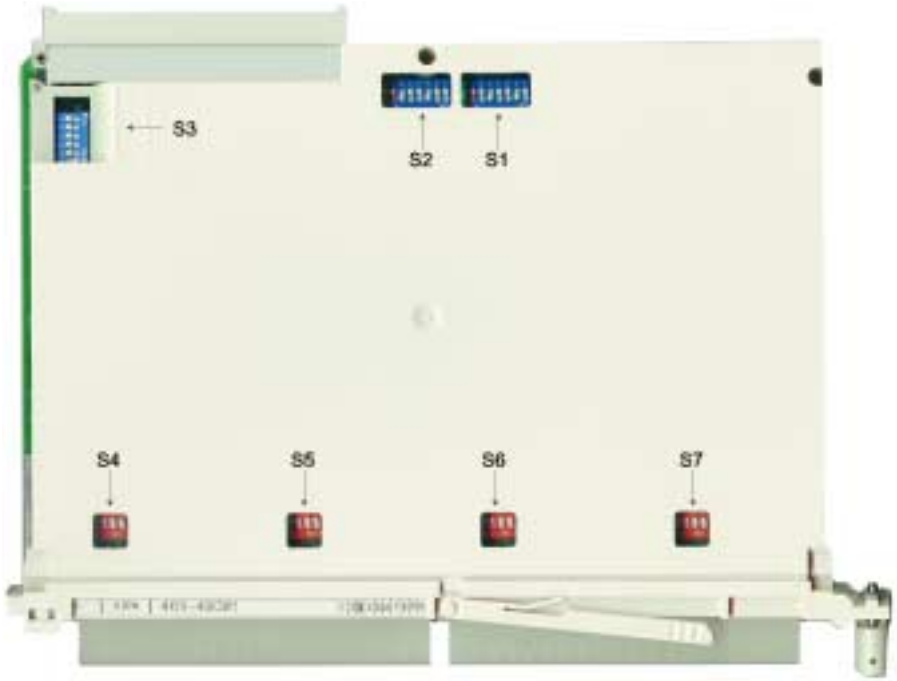

VIPA GmbH · Ohmstraße 4 · 91074 Herzogenaurach · Ph.: +49-9132-744-0 · Fax: +49-9132-744-144 · http://www.vipa.de

Switch positions of S1, S2 and S3

		S1-1	S1-2	S1-3	S1-4	S1-5/ S1-8/ S2-3/ S2-6	S1-6/ S2-1/ S2-4/ S2-7	S1-7/ S2-2/ S2-5/ S2-8	S3-6	S3-5	S3-4	S3-3
Integration time	none (single shot)	ON	ON									
	none (single shot)	ON	OFF									
	20 ms (50 Hz)	OFF	ON									
	16 ms (60Hz)	OFF	OFF									
Number of channels	8 channels			ON								
	16 channels			OFF								
Data format	two's complement				ON							
	signed amount				OFF							
Measuring range	± 500 mV					ON	ON	ON				
	± 1 V					ON	ON	OFF				
	± 5 V					ON	OFF	ON				
	± 10V					ON	OFF	OFF				
	± 20 mA					OFF	ON	ON				
	+ 4 - 20 mA					OFF	ON	OFF				
	0 – 10V (without any overrange)					OFF	OFF	ON				
	not assigned					OFF	OFF	OFF				
Building block address	F080h								ON	OFF	OFF	OFF
	F0A0h								ON	OFF	ON	OFF
	F0C0h								ON	ON	OFF	OFF
	F0E0h								ON	ON	ON	OFF

Digital measured-value representation of analogue input building blocks

After encoding an analogue measurand the digital result will be stored in a memory (RAM). The result is split into 2 Bytes, which are addressed sequentially.

Data bit	7	6	5	4	3	2	1	0		Data bit	7	6	5	4	3	2	1	0	
Byte 0	2^{12}	2^{11}	2^{10}	2^{9}	2^{8}	2^{7}	2^{6}	2^{5}	Address n	Byte 1	2^{4}	2^{3}	2^{2}	2^{1}	2^{0}	T	F	Ü	Address n+1
																always 0		0 : 0 up to 4095 units 1 > ± 4096 units (overflow)	

Two's complement representation.
2^{12} = sign, if represented as signed amount

Arithmetical encoding of measurands

Two's complement representation

Input measuring range								High byte										Low byte							
Units	±500mV	±1V	±5 V	±10V	0 – 10V	±20 mA	4 - 20 mA	2^{12}	2^{11}	2^{10}	2^{9}	2^{8}	2^{7}	2^{6}	2^{5}	2^{4}	2^{3}	2^{2}	2^{1}	2^{0}	-	-	Ü	
>4096	+1V	+2V	+10V		10,0V	+40mA	+32mA	0	1	1	1	1	1	1	1	1	1	1	1	1	0	0	1	Overflow
4095	0,9997V	1,9995V	9,9975V		9,997V	39,990mA	31,992mA	0	1	1	1	1	1	1	1	1	1	1	1	1	0	0	0	Overrange
2049	0,5002V	1,0005V	5,0024V	10,004mV	5,002V	20,009mA	16,007mA	0	1	0	0	0	0	0	0	0	0	0	1	1	0	0	0	
2048	0,5V	1,0V	'5,0V	10,0V	5,0V	20,0mA	16,0mA	0	1	0	0	0	0	0	0	0	0	0	0	0	0	0	0	
1024	0,25V	0,5V	2,5V	5,0V	2,5V	10,0mA	8,0mA	0	0	1	0	0	0	0	0	0	0	0	0	0	0	0	0	
1	0,244mV	0,488mV	2,441mV	4,882mV	2,44mV	0,009mA	7,812uA	0	0	0	0	0	0	0	0	0	0	0	0	1	0	0	0	
0	0,0V	0,0V	0,0V	0,0V	0,0V	0,0mA	0,0mA	0	0	0	0	0	0	0	0	0	0	0	0	0	0	0	0*	Nominal range
-1	-0,244mV	-0,488mV	-2,441mV	-4,882mV		-0,009mA		1	1	1	1	1	1	1	1	1	1	1	1	1	0	0	0	
-1024	-0,25V	-0,5V	-2,5V	-5,0V		-10,0mA		1	1	1	0	0	0	0	0	0	0	0	0	0	0	0	0	
-2048	-0,5V	-1,0V	-'5,0V	-10,0V		-20,0mA		1	1	0	0	0	0	0	0	0	0	0	0	0	0	0	0	
-2049	-0,5002V	-1,0005V	-5,0024V	-10,004mV		-20,009mA		1	0	1	1	1	1	1	1	1	1	1	1	1	0	0	0	Overrange
-4095	-0,9997V	-1,9995V	-9,9975V			-39,990mA		1	0	0	0	0	0	0	0	0	0	0	0	1	0	0	0	
>-4096	-1V	-2V	-10V			-40mA		1	0	0	0	0	0	0	0	0	0	0	0	0	0	0	1	Overflow

Signed amount representation

Input measuring range								High byte										Low byte							
Units	±500mV	±1V	±5 V	±10V	0 – 10V	±20 mA	4 - 20 mA	2^{12}	2^{11}	2^{10}	2^{9}	2^{8}	2^{7}	2^{6}	2^{5}	2^{4}	2^{3}	2^{2}	2^{1}	2^{0}	-	-	Ü	
>4096	+1V	+2V	+10V		10,0V	+40mA	+32mA	0	1	1	1	1	1	1	1	1	1	1	1	1	0	0	1	Overflow
4095	0,9997V	1,9995V	9,9975V		9,997V	39,990mA	31,992mA	0	1	1	1	1	1	1	1	1	1	1	1	1	0	0	0	Overrange
2049	0,5002V	1,0005V	5,0024V	10,004mV	5,002V	20,009mA	16,007mA	0	1	0	0	0	0	0	0	0	0	0	1	1	0	0	0	
2048	0,5V	1,0V	'5,0V	10,0V	5,0V	20,0mA	16,0mA	0	1	0	0	0	0	0	0	0	0	0	0	0	0	0	0	
1024	0,25V	0,5V	2,5V	5,0V	2,5V	10,0mA	8,0mA	0	0	1	0	0	0	0	0	0	0	0	0	0	0	0	0	
1	0,244mV	0,488mV	2,441mV	4,882mV	2,44mV	0,009mA	7,812uA	0	0	0	0	0	0	0	0	0	0	0	0	1	0	0	0	
0	0,0V	0,0V	0,0V	0,0V	0,0V	0,0mA	0,0mA	0	0	0	0	0	0	0	0	0	0	0	0	0	0	0	0*	Nominal range
-0	0,0V	0,0V	0,0V	0,0V		0,0mA	0,0mA	1	0	0	0	0	0	0	0	0	0	0	0	0	0	0	0	
-1	-0,244mV	-0,488mV	-2,441mV	-4,882mV		-0,009mA		1	0	0	0	0	0	0	0	0	0	0	0	1	0	0	0	
-1024	-0,25V	-0,5V	-2,5V	-5,0V		-10,0mA		1	0	1	0	0	0	0	0	0	0	0	0	0	0	0	0	
-2048	-0,5V	-1,0V	-'5,0V	-10,0V		-20,0mA		1	1	0	0	0	0	0	0	0	0	0	0	0	0	0	0	
-2049	-0,5002V	-1,0005V	-5,0024V	-10,004mV		-20,009mA		1	1	0	0	0	0	0	0	0	0	0	0	1	0	0	0	Overrange
-4095	-0,9997V	-1,9995V	-9,9975V			-39,990mA		1	1	1	1	1	1	1	1	1	1	1	1	1	0	0	0	
>-4096	-1V	-2V	-10V			-40mA		1	1	1	1	1	1	1	1	1	1	1	1	1	0	0	1	Overflow

* '1' by a measuring range from 0-10V for underflow

Front connector pin assignment

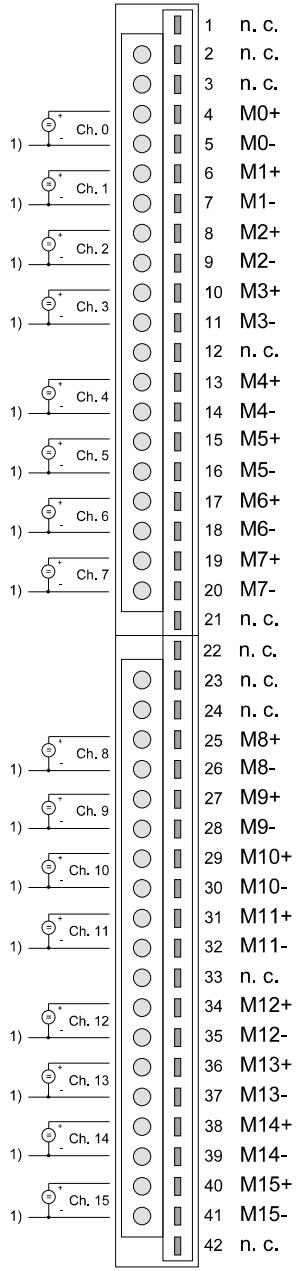

1) Observe the allowable potential difference between sensor and reference potential of the building block or between the sonsors!

DIP switch assignment

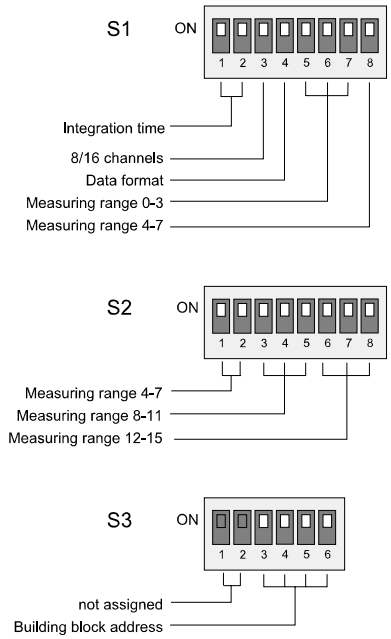
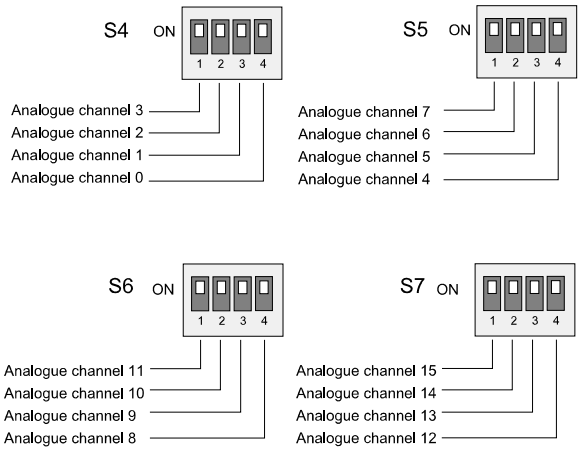
With the switches S4 to S7 the measuring range of voltage or current for the corresponding channel can be set.
Switch position: Voltage measurement : OFF
Current measurement : ON